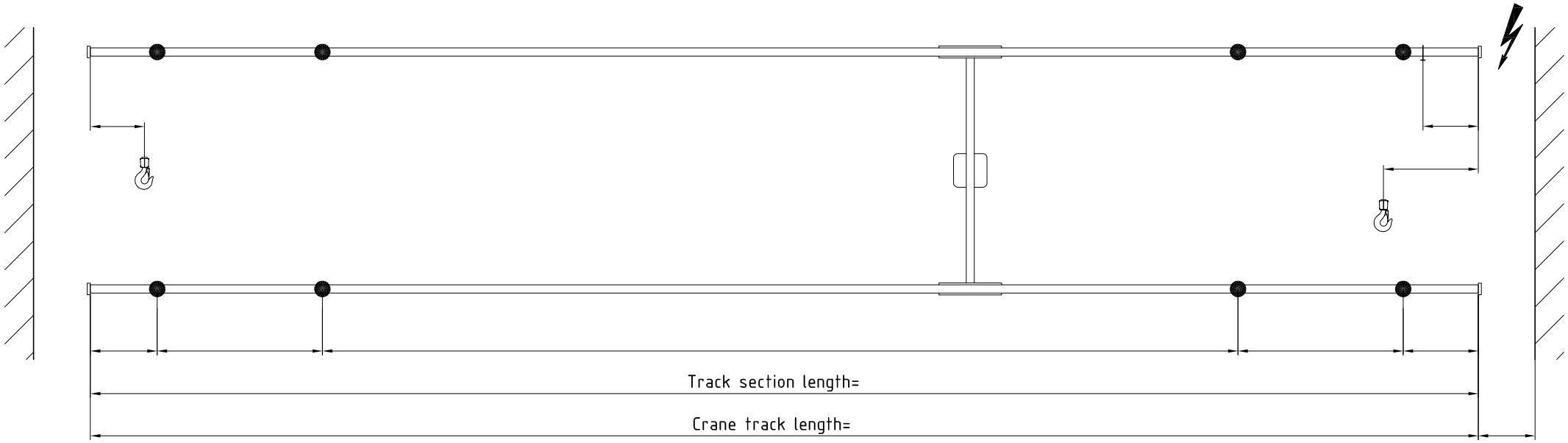


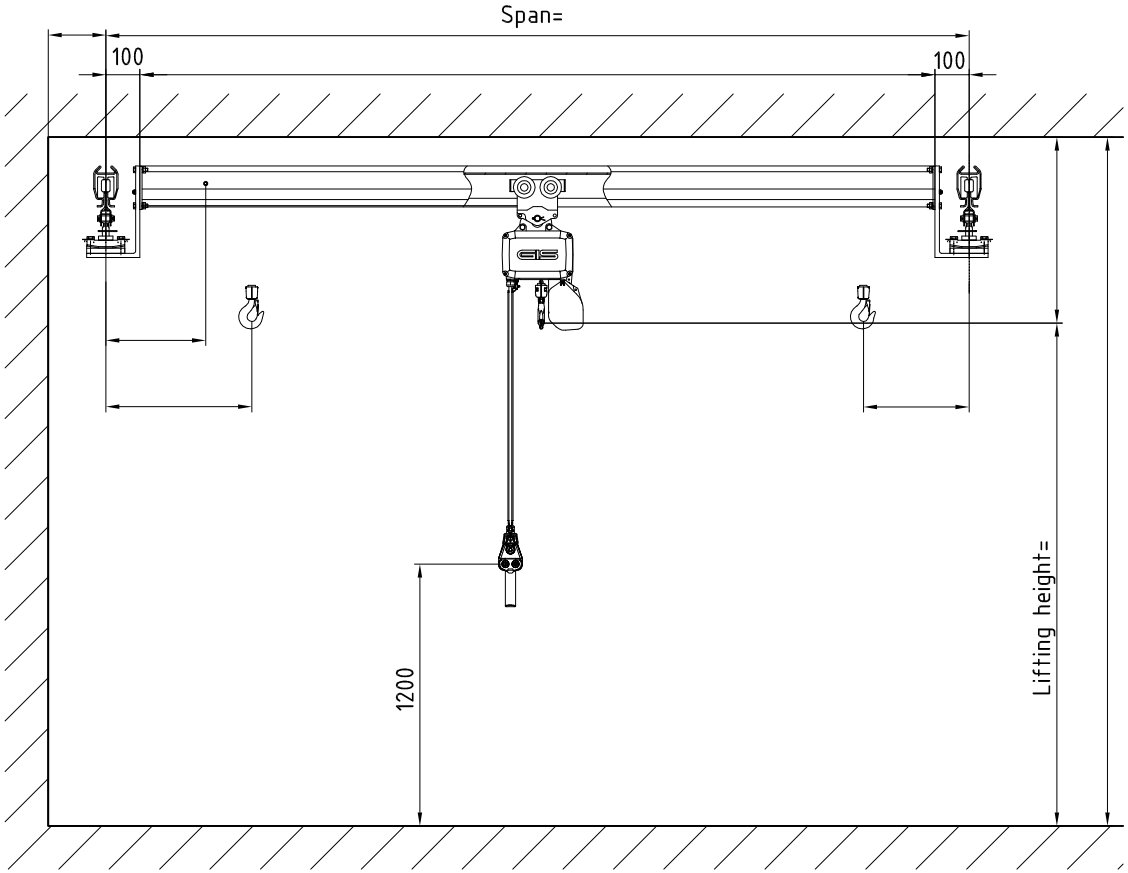


| Piece(s) | Piece(s) | Piece(s) | Piece(s) |
|---|---|---|---|
| Suspension pendulating short | Suspension pendulating from rod | Suspension rigid | Bracing |
| 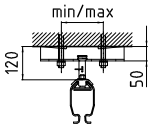 | 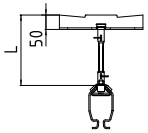 | 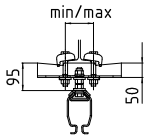 | 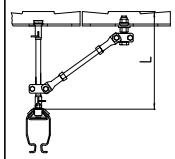 |
| min. 80-max. 216 mm | L = mm | min. 80-max. 216 mm | L = mm |

Load capacity [kg]:
Lifting speed [m/min]:
Crane bridge profile GISKB:
Crane track profile GISKB:
Power supply longitudinal:
cross:

Hoist :
Lifting height [m]:
Trolley drive [m/min]:
Crane drive [m/min]:

# SUSPENDED-CRANE

| Massstab Echelle | Gezeichnet Dessiné | | |
|---|---|---|---|
| % | Bearbeitet Modifié par | | |
| | Geprüft Contrôlé | | |
| | | | |

GIS Hebe- und Fördertechnik

Index